ASM-LSA800

LSA800-001
Loud Speaker Amplifier

INSTALLATION AND OPERATION MANUAL

REV 1.01 June 16, 2016

Anodyne Electronics Manufacturing Corp.
15-1925 Kirschner Road
Kelowna, BC, Canada.
V1Y 4N7

Telephone (250) 763-1088
Facsimile (250) 763-1089

Website: www.aem-corp.com

© 2016 Anodyne Electronics Manufacturing Corp. (AEM),
All Rights Reserved

CONFIDENTIAL AND PROPRIETARY TO ANODYNE ELECTRONICS MANUFACTURING CORP.

COPYRIGHT STATEMENT

© 2016 Anodyne Electronics Manufacturing Corp. (AEM), All Rights Reserved

This publication is the property of AEM and is protected by Canadian copyright laws. No part of this document may be reproduced or transmitted in any form or by any means including electronic, mechanical, photocopying, recording, or otherwise, without the prior written permission of AEM.

Prepared By:	Checked By:		Approved By:
Tony Pearson Designer Jun 16, 2016	Duane Stewart Designer June 27/16	Tom Betzelt Product Support Manager June 28, 2016	Todd Blackstock R&D Manager Aug 4/16

The status of this installation and operation manual is controlled by the revision shown on the title page. The status of each section is controlled by revision shown in the footer of each page. All revisions affecting sections of this manual have been incorporated.

AEM MANUAL REVISIONS

Section	Revision Number	Revision Description	Date
1, 3	Rev: 1.01	RAS#599: Corrected Peak power output, wording correction	Jun 16, 2016
All	Rev: 1.00	Initial release	Feb 23, 2015

CONFIDENTIAL AND PROPRIETARY TO ANODYNE ELECTRONICS MANUFACTURING CORP.

Table of Contents

Section	Title	Page
1.0	**Description**	
1.1	Introduction	1-1
1.2	Product Description	1-1
1.3	Design Features	1-2
1.4	Specifications	1-3
1.4.1	Electrical Specifications	1-3
1.4.2	Physical Specifications	1-4
1.4.3	Environmental Specifications	1-5
1.5	Product Limitations	1-5
2.0	**Installation**	
2.1	Introduction	2-1
2.2	Unpacking and Inspection	2-1
2.2.1	Warranty	2-1
2.3	Installation Procedures	2-1
2.3.1	Warnings	2-1
2.3.2	Cautions	2-1
2.3.3	Cabling and Wiring	2-2
2.3.4	Post-Installation Checks	2-2
2.4	Adjustments and Connections	2-3
2.5	Accessories Required But Not Supplied	2-3
2.6	Continued Airworthiness	2-4
2.7	Installation Drawings	2-4
3.0	**Operation**	
3.1	Introduction	3-1
3.2	General	3-1
3.3	Controls and Indicators	3-1
3.3.1	Annunciators	3-1
3.3.2	Remote ON/OFF	3-2

CONFIDENTIAL AND PROPRIETARY TO ANODYNE ELECTRONICS MANUFACTURING CORP.

Section 1.0 Description

1.1 Introduction

Information in this section consists of product description, design features and specifications for the LSA800-001 Loud Speaker Amplifier. All derivative product information will be contained in the applicable manual supplement, which may be obtained from AEM as required.

Review all notes, warnings and cautions.

1.2 Product Description

The LSA800-001 is AEM's next generation loud speaker amplifier. It consists of two output channels, each utilizing a highly efficient Power Supply and a Class-D Amplifier to produce a total of 800 watts RMS (1600 watts Peak) of output power with minimal distortion and noise.

The LSA800-001 is more compact and lighter than other comparable amplifier systems.

The LSA800-001 is designed and qualified to meet operational roles on fixed wing aircraft as well as light and medium helicopter airframes with single and twin turbine engine types.

It is intended for use with up to two LS600 external speaker arrays or one TS95-16xx and a siren controller as a complete system.

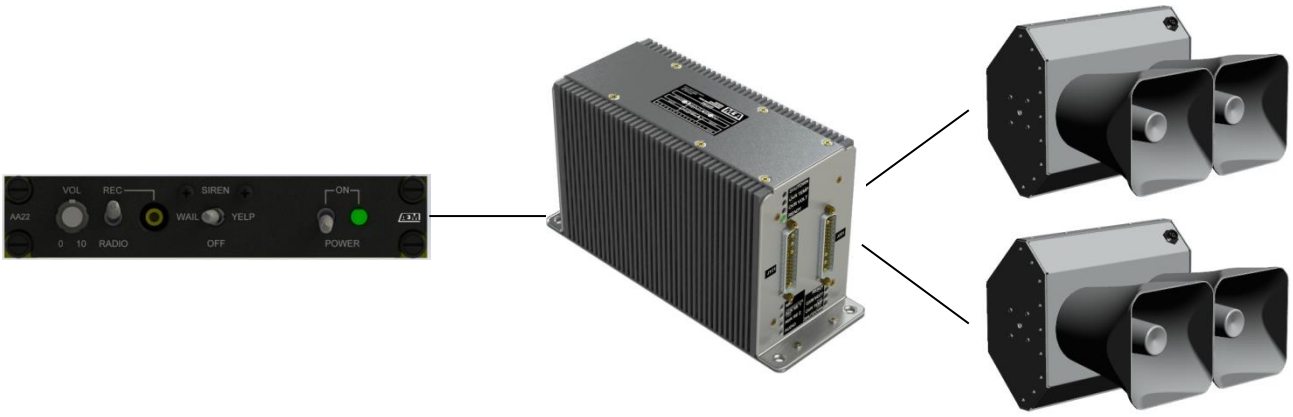

Siren Controller Loud Speaker Amplifier Loud Speakers

CONFIDENTIAL AND PROPRIETARY TO ANODYNE ELECTRONICS MANUFACTURING CORP.

1.3 Design Features

The LSA800-001 has a two differential speaker outputs, each capable of driving 400 watts RMS (800 watts Peak) into 3 Ohm loads for a total of 800 watts RMS (1600 watts Peak).

The LSA800-001 has a number of built in protection circuits that keep the amplifier from being damaged, including *Output Short Circuit* and *Thermal Shutdown* which minimize the possibility of damage to the speaker output stage.

The LSA800-001 has four audio inputs consisting of one microphone, two single ended inputs and one differential audio input to provide input source flexibility. Each input has a field adjustable gain level to optimize speaker output power for various input signal levels.

The amplifier status annunciators for the protection circuits and user accessible audio input adjustments are displayed externally near the D-Sub connectors.

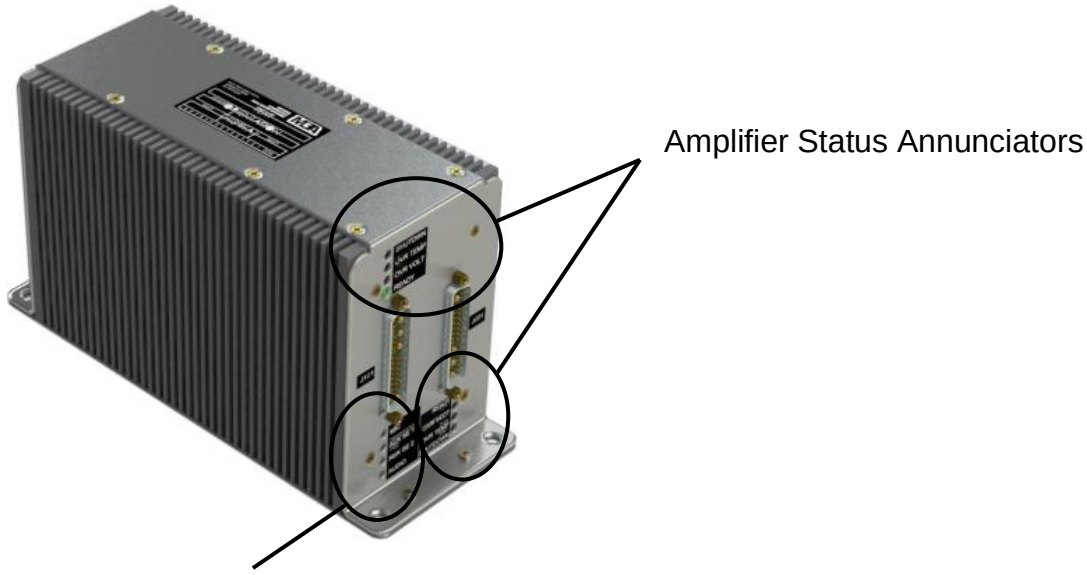

See Section 2.0 for further details on the Audio Input Adjustments and Section 3.0 for Status Annunciators.

There are two Remote On/Off inputs that provide the ability for low current switched high or switched low remote activation of the amplifier if being turned on remotely from a siren controller.

A single PA Ready output provides a switched ground for remote sensing or displaying of the amplifier ready state.

CONFIDENTIAL AND PROPRIETARY TO ANODYNE ELECTRONICS MANUFACTURING CORP.

1.4 Specifications

1.4.1 Electrical Specifications

1.4.1.1 Input Operating Voltage

Normal Operating Conditions:

Nominal:	+28.0 Vdc
Maximum:	+30.3 Vdc
Minimum:	+22.0 Vdc

Abnormal Operating Conditions:

Nominal:	N/A
Maximum:	N/A
Minimum:	N/A

Input Current: 40A maximum @ 28.0 Vdc

1.4.1.2 Input Signals

Microphone Audio	(MIC HI IN)
Quantity:	1
Circuit Type:	Single-Ended
Rated Level:	250 mVrms ± 10%
Impedance:	150 Ohm ± 10%
Mic Bias:	13.5 ± 0.5Vdc
Auxiliary Differential Audio	(AUDIO HI IN)
Quantity:	1
Circuit Type:	Differential
Rated Level:	500 mVrms ± 10%
Impedance:	1k Ohm ± 10%
Single-Ended Auxiliary Audio	(AUX SE HI IN)
Quantity:	2
Circuit Type:	Single-Ended
Rated Level:	500mVrms ± 10%
Impedance:	1k Ohm ± 10%
Remote On/Off	(REMOTE ON/OFF 28V IN)
Quantity:	1
Rated Level:	28V (active high), 10V minimum
Current (Sink)	< 2 mA
Remote On/Off	(REMOTE ON/OFF GND IN)
Quantity:	1
Rated Level:	0V (active low), 1V maximum
Current (Sourced)	>5 mA

CONFIDENTIAL AND PROPRIETARY TO ANODYNE ELECTRONICS MANUFACTURING CORP.

1.4.1.3 Output Signals

Speaker Audio	(SPEAKER)
Quantity:	2
Circuit Type:	Differential
Output Power:	400 Wrms (800 Wpk) into 3 Ohms per channel 800 Wrms (1600 Wpk) total
Rated Level:	34.65 Vrms into 3 Ohms per channel
Duty Cycle:	25% duty cycle siren audio, 1 min max. on time 100% duty cycle voice audio
Freq. Response:	< 3db from 200 Hz to 6 kHz
Distortion:	< 10% @ Rated output < 3% @10% of Rated output
Audio Noise Level:	≥ 60 dB below rated output of the system
PA Ready	(PA READY)
Quantity:	2
Circuit Type:	Single Ended, Switched ground (active low)
Rated Level:	≤ 3 Ω
Current:	0.4 A maximum

1.4.2 Physical Specifications

Height	5.51" (140 mm) max
Length	9.86" (250.4 mm) max
Width	3.74" (95 mm) max
Weight	6.3 lbs (2.9 kg) max.
Mounting	Remote mount using four AN4 (1/4-28) Hex fasteners and four 0.28” inside Diameter, 0.56” outside Diameter flat washers Recommend mounting with heatsink fins facing upwards or vertical and exposed to airflow.
Connectors	Two 36 pin D-sub combination connectors (50 pin shell) with jack post hardware
Material/Finish	Enclosure and heatsink are aluminum with Clear MIL-DTL-5541 Type II Class 3 coating
Bonding	≤2.5 mΩ

CONFIDENTIAL AND PROPRIETARY TO ANODYNE ELECTRONICS MANUFACTURING CORP.

1.4.3 Environmental Specifications

Temperature	-30 to +60°C (operating) -55 to +85°C (survival)
Altitude	25,000 feet max.
Humidity	95% Non-condensing
Operational Shock	6g for 11 ms
Crash Safety Shock	20g for 11 msec (impulse), 3 sec (sustained)
Vibration	Conforms to DO-160G Category 'S' Curves B & M and Category 'U2' Curves F & F1

Qualification of the LSA800-001 Loud Speaker Amplifier was completed in accordance with DO-160G Env. Cat. B4-BAB[SBM][U2FF1]XXXXXXA[BXX]AB[ZC][RR]BXXXAC.

1.5 Product Limitations

At rated output, utilizing siren audio, the LSA800-001 should not be operated with more than a 25% duty cycle at one minute of on time, followed by three minutes of off time.

End of Section 1.0

CONFIDENTIAL AND PROPRIETARY TO ANODYNE ELECTRONICS MANUFACTURING CORP.

Section 2.0 Installation

2.1 Introduction

Information in this section consists of: unpacking and inspection procedures, installation procedures, post-installation checks, and installation drawings.

2.2 Unpacking and Inspection

Unpack the equipment carefully. Inspect the unit visually for damage due to shipping and report all such claims immediately to the carrier involved. Note that each unit should have the following:

- LSA800-001 Loud Speaker Amplifier
- Product Information Card
- Certificate of Conformity or Release certification

Verify that all items are present before proceeding and report any shortage immediately to your supplier.

2.2.1 Warranty

All Anodyne Electronics Manufacturing Corp. (AEM) products are warranted for 2 years. See the website www.aem-corp.com/warranty for complete details.

2.3 Installation Procedures

2.3.1 Warnings

WARNING:
When the amplifier is connected to an appropriate speaker, the system is capable of producing high sound pressure levels. Proper personal protective equipment is required to prevent hearing damage.

2.3.2 Cautions

CAUTION:
Do not obstruct ambient air flow to the heatsink fins.

Do not operate the unit outside of the parameters listed in the Electrical Specifications section.

Always check ADF and compass calibration after installing external speakers or power amplifiers.

CONFIDENTIAL AND PROPRIETARY TO ANODYNE ELECTRONICS MANUFACTURING CORP.

CAUTION:
Use shielded cable exactly as shown and ground as indicated. Installation can be severely degraded by incorrect wiring and shielding.

Precautions are necessary when external signals, such as intercom, radio or recorders are used. The high gain of the amplifier requires care to prevent feedback or crosstalk. Ground loops and stray currents in the input line must be eliminated.

Bundle and route the Speaker Output wires separately from low level Audio Input lines.

2.3.3 Cabling and Wiring

All wire shall be selected in accordance with the original aircraft manufacturer's Maintenance Instructions or AC43.13-1B Change 1, Paragraphs 11-76 through 11-78. Unshielded wire types shall qualify to MIL-W-22759 as specified in AC43.13-1B Change 1, Paragraphs 11-85, 11-86, and listed in Table 11-11. For shielded wire applications, use Tefzel MIL-C-27500 shielded wire with solder sleeves (for shield terminations) to make the most compact and easily terminated interconnect. Follow the interconnect drawing in Section 2.7 as required.

Allow 3" from the end of the shielded wiring to the shield termination to allow the connector hood to be easily installed. Refer to the interconnect drawing in Section 2.7 for shield termination details. Note that the hood is a "clamshell" hood, and is installed after the wiring is complete. Aircraft harnessing shall permit the unit to be removed for easy access to all adjustments.

Maintain wire segregation and route wiring in accordance with the original aircraft manufacturers Maintenance Instructions.

Reference the Interconnect drawing for wire sizing specifications. Check that the ground connection is clean and well secured, and that it shares no path with any electrically noisy aircraft accessories such as blowers, turn and bank instruments or similar loads. Power to this unit must be supplied from a separate circuit breaker or fuse (fast blow), and not attached to any other circuit breaker without additional protection. Verify that the selected circuit breaker size and wire gauge are adequate for the installation using the techniques specified in AC43.13-1B Change 1, Paragraphs 11-47 through 11-51 and 11-66 through 11-69.

2.3.4 Post-Installation Checks

Ensure all connectors are tight and the mechanical installation is sound.

2.3.4.1 Voltage/Resistance Checks

Do not connect the LSA800-001 to the wiring harness until the following conditions are met.

Check the following:

a) Check P101 and P201, pin A1 for +28 Vdc relative to ground.
b) Check P101 and P201, pin A4 for continuity to ground (less than 0.5Ω).
c) Check P101 and P201, pins A2 and A3 for no connection to ground (open).

CONFIDENTIAL AND PROPRIETARY TO ANODYNE ELECTRONICS MANUFACTURING CORP.

2.4 Adjustments and Connections

The unit is shipped from the factory with all internal adjustments set to the normal test levels. Once installed in the aircraft, it may be desirable to change some of these settings to best suit the local operating environment.

The internal field adjustable settings are located adjacent to the external D-Sub connector and are labeled:

- MIC (Microphone Audio)
- AUX SE 1 (Single-Ended Auxiliary Audio)
- AUX SE 2 (Single-Ended Auxiliary Audio)
- AUDIO (Auxiliary Differential Audio)

These gain adjustments each cover a 33dB range of -30dB to +3dB from their rated nominal inputs.

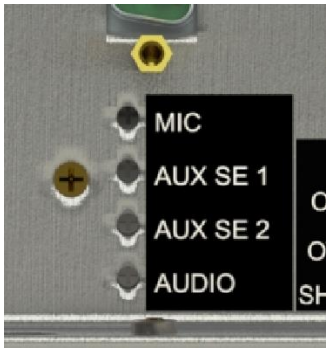

2.5 Accessories Required But Not Supplied

Installation kit p/n LSA400-IKC x2 (crimp) or LSA400-IKS x2 (solder) are required to complete the installation. The kit consists of the following:

LSA400-IKC consists of:

Quantity	Description	AEM Part No.
1	D-Sub, Socket, 36 Crimp Housing	120-21-001
32	Contact, Female, Signal	120-26-010
4	Contact, Female, 10-12 AWG	120-26-009
1	Hood, Metal	120-28-003

LSA400-IKS consists of:

Quantity	Description	AEM Part No.
1	D-Sub, Socket, 36 Solder Housing	120-20-002
4	Contact, Female, 10-12 AWG	120-26-004
1	Hood, Metal	120-28-003

CONFIDENTIAL AND PROPRIETARY TO ANODYNE ELECTRONICS MANUFACTURING CORP.

2.6 Continued Airworthiness

Maintenance of the LSA800-001 Loud Speaker Amplifier is ‘on condition’ only. Periodic maintenance of this product is not required.

2.7 Installation Drawings

DOCUMENT	REV	DESCRIPTION	TYPE	SERIAL NO.
LSA800-001-403-0	1.10	Loud Speaker Amplifier	Interconnect	1003+
LSA800-001-403-1	1.00	PA/Siren 900 Watt System	Interconnect	1003+
LSA800-001-405-0	1.00	Loud Speaker Amplifier	Connector Map	1003+
LSA800-001-922-0	1.20	Loud Speaker Amplifier	Mechanical Installation	1003+

Section 2.0 ends following above documents

CONFIDENTIAL AND PROPRIETARY TO ANODYNE ELECTRONICS MANUFACTURING CORP.

REVISIONS			
REV	DESCRIPTION	DATE	BY
1.10	RAS420 - SECONDARY POWER LINE WAS SHIELDED.	JAN 29/15	LAC

LSA800-001 INSTALLATION NOTES

NOTES:

1. ALL WIRES SHOULD BE 22 AWG UNLESS OTHERWISE SPECIFIED. ALL UNSHIELDED WIRE SHALL BE SELECTED IN ACCORDANCE WITH AC43.13-1B CHANGE 1, PARAGRAPHS 11-76 THROUGH 11-78. WIRE TYPES SHOULD BE TO MIL-W-22759 AS SPECIFIED IN AC43.13-1B CHANGE 1, PARAGRAPHS 11-85, 11-86 AND LISTED IN TABLE 11-11. ALL SHIELDED WIRE/CABLE SHOULD BE IN ACCORDANCE WITH MIL-C-27500.

2. CABLE LENGTH NOT TO EXCEED 30 FT [9.14 M] UNLESS OTHERWISE SPECIFIED.

3. CABLE LENGTH NOT TO EXCEED 3.3 FT [1.0 M].

4. USE ONLY ONE OF THE REMOTE ON/OFF OPTIONS.

5. SYSTEM CROSSTALK MAY BE EFFECTED BY STYLE OF HEADSET AND JACK. CHECK SPECIFICATIONS AND SYSTEM REQUIREMENTS BEFORE SELECTING AND INSTALLING SAME.

6. CABLE LENGTH NOT TO EXCEED 3.3 FT [1.0 M].

7. SHIELD RETURNS SHOULD BE GROUNDED TO LOCAL AIRFRAME GROUND.

8. SHIELD LENGTH NOT TO EXCEED 1 FT [0.3 M]. SPEAKER OUTPUT WIRES TO BE BUNDLED AND ROUTED SEPARATELY FROM LOW LEVEL AUDIO INPUT LINES.

9. NO CONNECTION IN THE AIRCRAFT.

10. SWITCHED GROUND (ACTIVE LOW) OUTPUT WHEN PA IS IN ACTIVE/READY STATE, MAX 0.4 A.

DEFINITIONS:

N/C: NO CONNECTION. THE PIN IS NOT CONNECTED TO ANYTHING INTERNALLY, AND THEREFORE SHALL HAVE NO CONNECTION EXTERNALLY.

N/C SPARE: NO CONNECTION INTERNALLY, BUT A SPARE WIRE SHALL BE INSTALLED IN THE WIRE HARNESS.

RESERVED: MAY BE CONNECTED AND USED IN THE FUTURE. THE CIRCUITRY MAY BE PRESENT OR ADDED TO ACTIVATE THE FUNCTION. THE PIN MAY BE USED FOR TEST PURPOSES. THERE IS NO EXTERNAL CONNECTION.

RESERVED SPARE: (RSV SP) RESERVED, BUT INSTRUCTIONS SHALL BE FOLLOWED TO ACTIVATE THE CIRCUITRY. A SPARE WIRE SHALL BE INSTALLED IN THE WIRE HARNESS.

	NAME	DATE
DRAWN	RB	OCT 30/14
CHECKED		Jan. 29th, 2015
APPROVED		Jan 30/15

PROPRIETARY AND CONFIDENTIAL

THE INFORMATION CONTAINED IN THIS DRAWING IS THE SOLE PROPERTY OF ANODYNE ELECTRONICS MANUFACTURING. ANY REPRODUCTION IN PART OR AS A WHOLE WITHOUT THE WRITTEN PERMISSION OF ANODYNE ELECTRONICS MANUFACTURING IS PROHIBITED.

UNLESS OTHERWISE SPECIFIED:
DIMENSIONS ARE IN INCHES
TOLERANCES:
FRACTIONAL ± 0.5 Deg
ANGULAR: MACH ± BEND ±
TWO PLACE DECIMAL ± 0.01
THREE PLACE DECIMAL ± 0.005
INTERPRET GEOMETRIC TOLERANCING PER:
MATERIAL N/A
FINISH N/A
DO NOT SCALE DRAWING

ANODYNE ELECTRONICS MANUFACTURING CORP.
KELOWNA BC CANADA
(250)-763-1088
WWW.AEM-CORP.COM

TITLE: LOUD SPEAKER AMPLIFIER INTERCONNECT

SIZE	CAGE CODE	PART No.	REV
B	L9015	LSA800-001	1.10

SCALE: 1:1 | DRAWING No.: 403-0 | SHEET 1 of 2

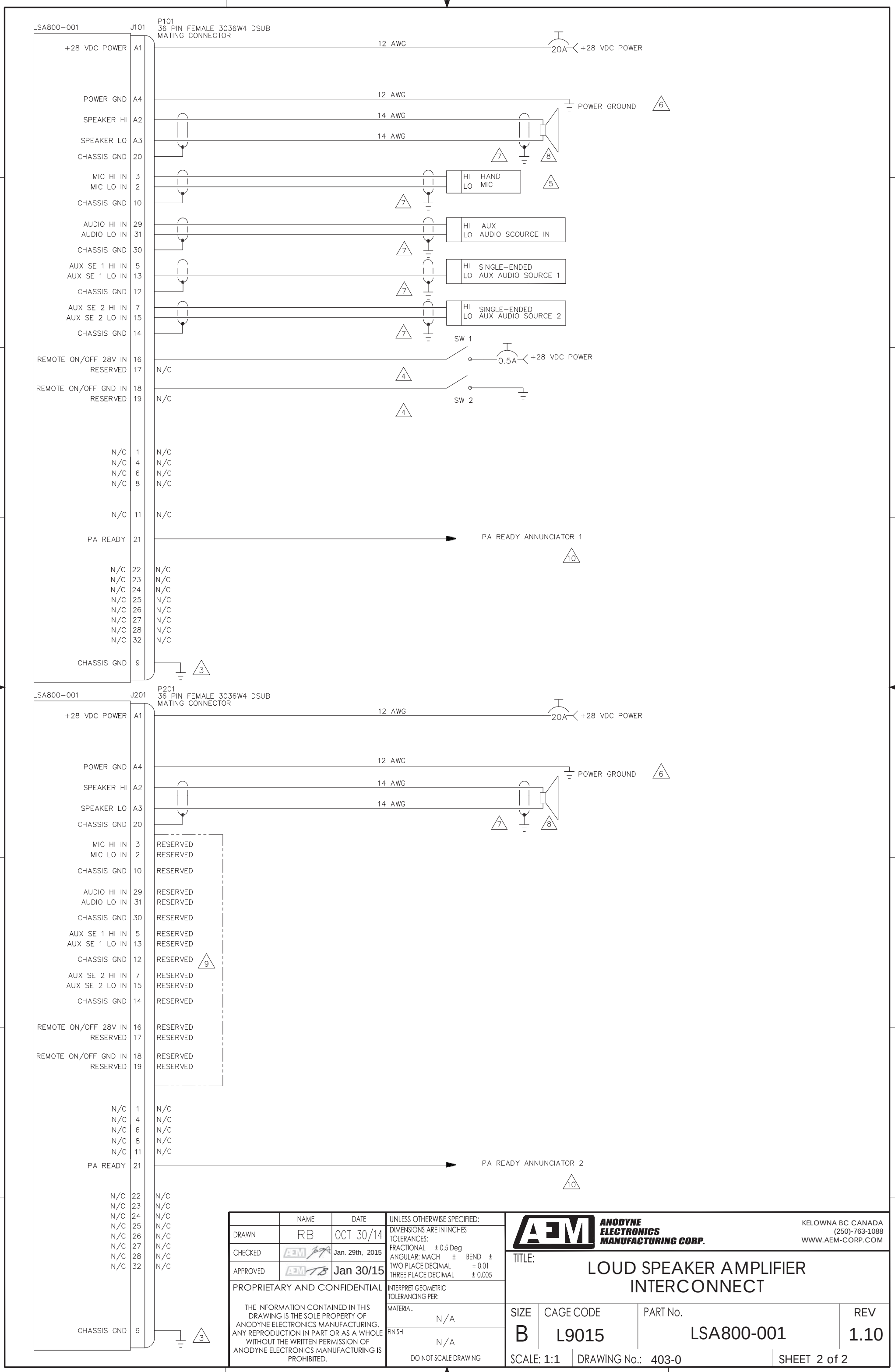

	NAME	DATE
DRAWN	RB	OCT 30/14
CHECKED		Jan. 29th, 2015
APPROVED		Jan 30/15

PROPRIETARY AND CONFIDENTIAL

THE INFORMATION CONTAINED IN THIS DRAWING IS THE SOLE PROPERTY OF ANODYNE ELECTRONICS MANUFACTURING. ANY REPRODUCTION IN PART OR AS A WHOLE WITHOUT THE WRITTEN PERMISSION OF ANODYNE ELECTRONICS MANUFACTURING IS PROHIBITED.

UNLESS OTHERWISE SPECIFIED:
DIMENSIONS ARE IN INCHES
TOLERANCES:
FRACTIONAL ± 0.5 Deg
ANGULAR: MACH ± BEND ±
TWO PLACE DECIMAL ± 0.01
THREE PLACE DECIMAL ± 0.005

INTERPRET GEOMETRIC TOLERANCING PER:

MATERIAL N/A

FINISH N/A

DO NOT SCALE DRAWING

ANODYNE ELECTRONICS MANUFACTURING CORP.

KELOWNA BC CANADA
(250)-763-1088
WWW.AEM-CORP.COM

TITLE: LOUD SPEAKER AMPLIFIER INTERCONNECT

SIZE	CAGE CODE	PART No.	REV
B	L9015	LSA800-001	1.10

SCALE: 1:1 | DRAWING No.: 403-0 | SHEET 2 of 2

LSA800-001 INSTALLATION NOTES

NOTES:

1. ALL WIRES SHOULD BE 22 AWG UNLESS OTHERWISE SPECIFIED. ALL UNSHIELDED WIRE SHALL BE SELECTED IN ACCORDANCE WITH AC43.13-1B CHANGE 1, PARAGRAPHS 11-76 THROUGH 11-78. WIRE TYPES SHOULD BE TO MIL-W-22759 AS SPECIFIED IN AC43.13-1B CHANGE 1, PARAGRAPHS 11-85, 11-86 AND LISTED IN TABLE 11-11. ALL SHIELDED WIRE/CABLE SHOULD BE IN ACCORDANCE WITH MIL-C-27500.

2. CABLE LENGTH NOT TO EXCEED 30 FT [9.14 M], UNLESS OTHERWISE SPECIFIED.

3. CABLE LENGTH NOT TO EXCEED 1 FT [0.3 M].

4. SYSTEM CROSSTALK MAY BE EFFECTED BY STYLE OF HEADSET AND JACK. CHECK SPECIFICATIONS AND SYSTEM REQUIREMENTS BEFORE SELECTING AND INSTALLING SAME.

5. OPTIONAL. PARALLEL TO HEADPHONE (1 ONLY) CONNECTION FOR MONITORING RADIOS VIA EXTERNAL P.A. SPEAKER.

6. CABLE LENGTH NOT TO EXCEED 3.3 FT [1.0 M].

7. SHIELDS SHOULD BE GROUNDED TO LOCAL AIRFRAME GROUND, UNLESS OTHERWISE SPECIFIED.

8. SHIELD LENGTH NOT TO EXCEED 1 FT [0.3 M]. SPEAKER OUTPUT WIRES TO BE BUNDLED AND ROUTED SEPERATELY FROM LOW LEVEL AUDIO INPUT LINES.

9. NO CONNECTION IN THE AIRCRAFT.

10. SWITCHED TO POWER GROUND WHEN ACTIVE. CURRENT (SINK) 0.4A MAX.

DEFINITIONS:

N/C: NO CONNECTION. THE PIN IS NOT CONNECTED TO ANYTHING INTERNALLY, AND THEREFORE SHALL HAVE NO CONNECTION EXTERNALLY.

N/C SPARE: NO CONNECTION INTERNALLY, BUT A SPARE WIRE SHALL BE INSTALLED IN THE WIRE HARNESS.

RESERVED: MAY BE CONNECTED AND USED IN THE FUTURE. THE CIRCUITRY MAY BE PRESENT OR ADDED TO ACTIVATE THE FUNCTION. THE PIN MAY BE USED FOR TEST PURPOSES. THERE IS NO EXTERNAL CONNECTION.

RESERVED SPARE: (RSV SP) RESERVED, BUT INSTRUCTIONS SHALL BE FOLLOWED TO ACTIVATE THE CIRCUITRY. A SPARE WIRE SHALL BE INSTALLED IN THE WIRE HARNESS.

	NAME	DATE
DRAWN	LAC	JAN 27/15
CHECKED	AEM	Feb. 24th, 2015
APPROVED	AEM	Feb 24/15

PROPRIETARY AND CONFIDENTIAL

THE INFORMATION CONTAINED IN THIS DRAWING IS THE SOLE PROPERTY OF ANODYNE ELECTRONICS MANUFACTURING. ANY REPRODUCTION IN PART OR AS A WHOLE WITHOUT THE WRITTEN PERMISSION OF ANODYNE ELECTRONICS MANUFACTURING IS PROHIBITED.

UNLESS OTHERWISE SPECIFIED:
DIMENSIONS ARE IN INCHES
TOLERANCES:
FRACTIONAL ± 0.5 Deg
ANGULAR: MACH ± BEND ±
TWO PLACE DECIMAL ± 0.01
THREE PLACE DECIMAL ± 0.005

INTERPRET GEOMETRIC TOLERANCING PER:

MATERIAL N/A

FINISH N/A

DO NOT SCALE DRAWING

ANODYNE ELECTRONICS MANUFACTURING CORP.
KELOWNA BC CANADA
(250)-763-1088
WWW.AEM-CORP.COM

TITLE: PA/SIREN 900 WATT SYSTEM INTERCONNECT

SIZE	CAGE CODE	PART No.	REV
A	L9015	LSA800-001	1.00

SCALE: 1:1 DRAWING No.: 403-1 SHEET 1 of 2

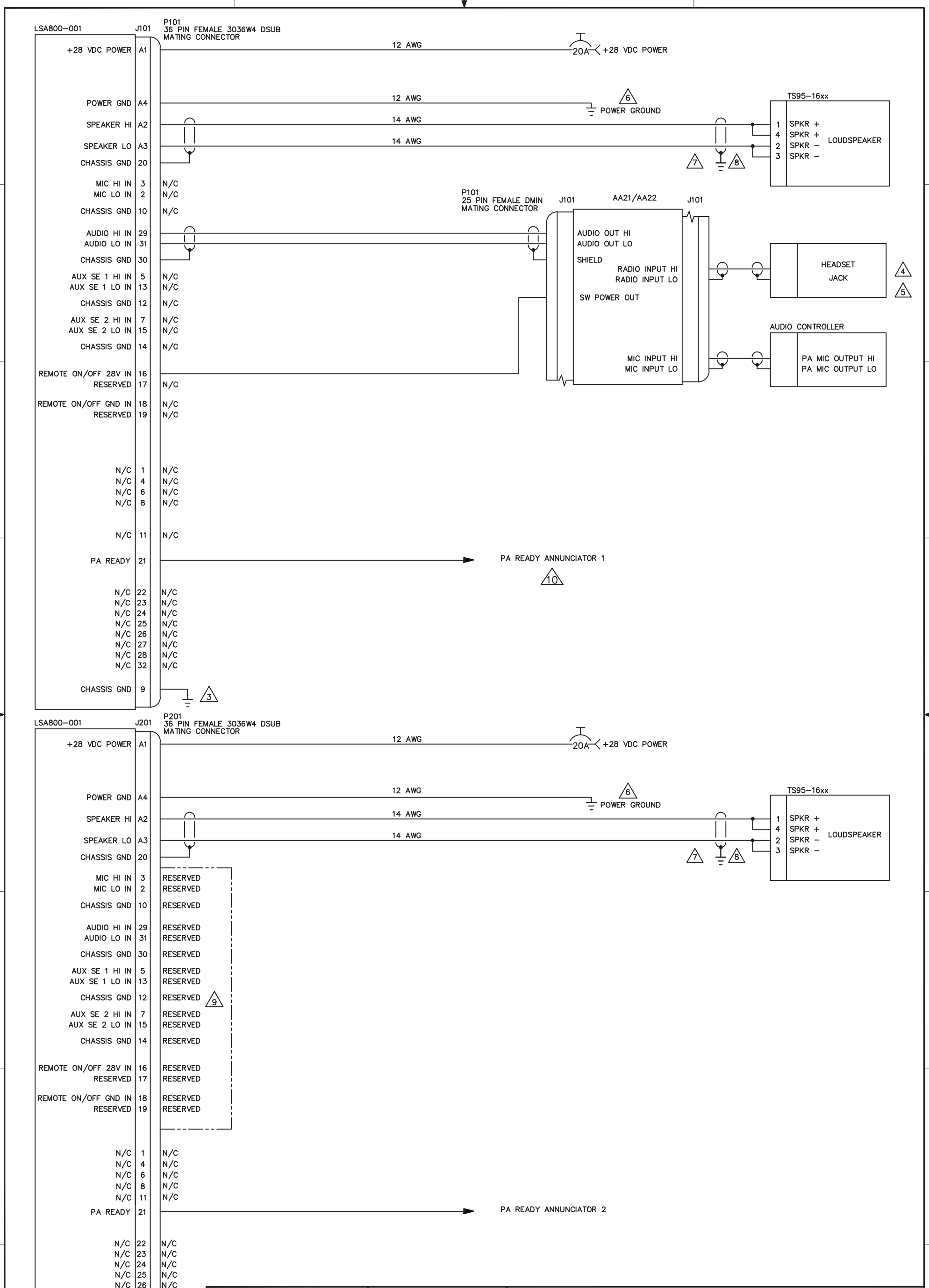

	NAME	DATE
DRAWN	LAC	JAN 27/15
CHECKED		Feb. 24th, 2015
APPROVED		Feb 24/15

CONFIDENTIAL AND PROPRIETARY
THE INFORMATION CONTAINED IN THIS DRAWING IS THE SOLE PROPERTY OF ANODYNE ELECTRONICS MANUFACTURING. ANY REPRODUCTION IN PART OR AS A WHOLE WITHOUT THE WRITTEN PERMISSION OF ANODYNE ELECTRONICS MANUFACTURING IS PROHIBITED.

UNLESS OTHERWISE SPECIFIED:
DIMENSIONS ARE IN INCHES [MM]
TOLERANCES:
FRACTIONAL ±0.0625"
ANGULAR ±0.5°
TWO DECIMAL PLACE ±0.010"
THREE DECIMAL PLACE ±0.005"

MATERIAL: N/A

FINISH: N/A

ANODYNE ELECTRONICS MANUFACTURING CORP.
KELOWNA BC CANADA
(250)-763-1088
WWW.AEM-CORP.COM

TITLE:
PA/SIREN 900 WATT SYSTEM INTERCONNECT

PAPER SIZE:	CAGE CODE	PART No.:	REVISION
B	L9015	LSA800-001	1.00

SCALE:1:1	DO NOT SCALE DRAWING	DRAWING No.: 403-1	SHEET:2 of 2

P101

36 PIN D-MIN SOCKET
MATING CONNECTOR

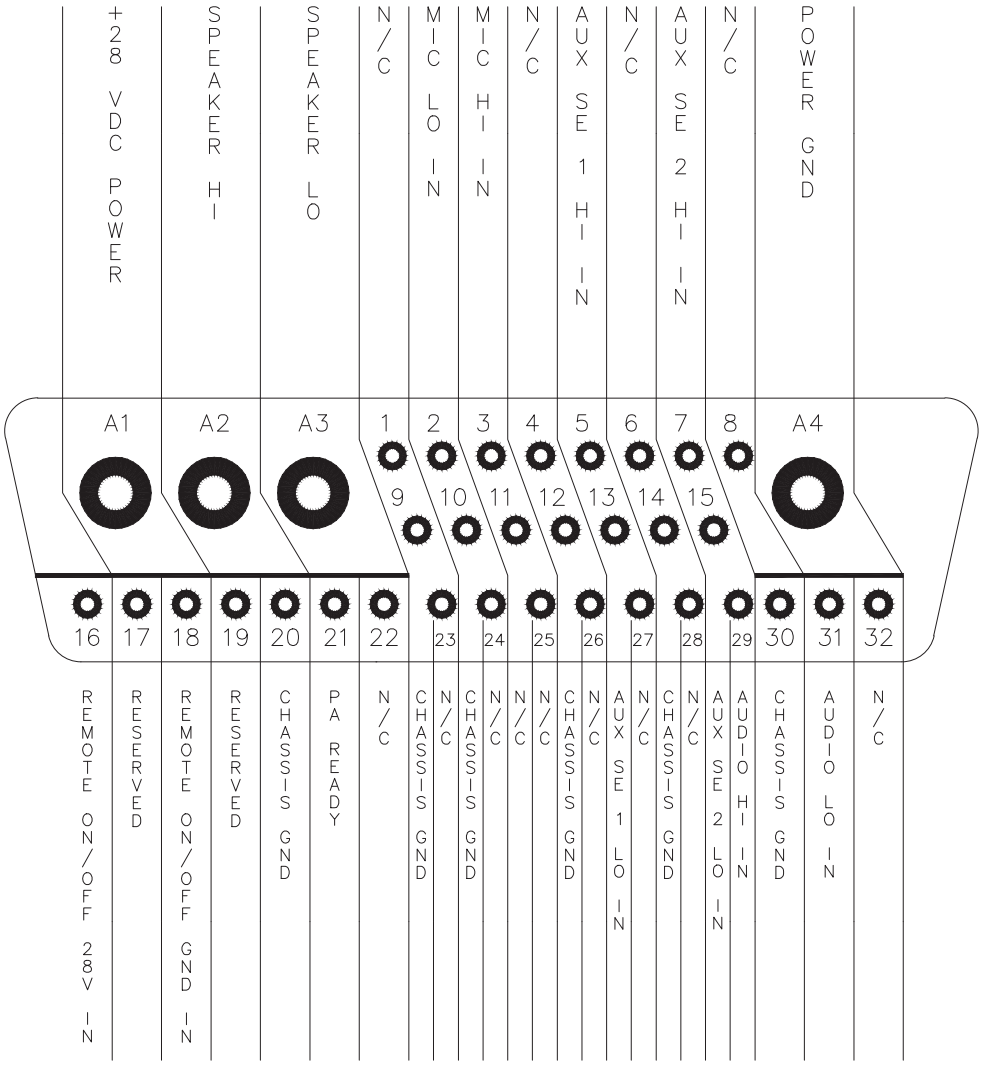

VIEW IS FROM REAR OF AIRFRAME CONNECTOR.

	NAME	DATE
DRAWN	RB	OCT 30/14
CHECKED	AEM	Oct 30/14
APPROVED	AEM	Oct 31/14

PROPRIETARY AND CONFIDENTIAL

THE INFORMATION CONTAINED IN THIS DRAWING IS THE SOLE PROPERTY OF ANODYNE ELECTRONICS MANUFACTURING. ANY REPRODUCTION IN PART OR AS A WHOLE WITHOUT THE WRITTEN PERMISSION OF ANODYNE ELECTRONICS MANUFACTURING IS PROHIBITED.

UNLESS OTHERWISE SPECIFIED:
DIMENSIONS ARE IN INCHES
TOLERANCES:
FRACTIONAL ± 0.5 Deg
ANGULAR: MACH ± BEND ±
TWO PLACE DECIMAL ± 0.01
THREE PLACE DECIMAL ± 0.005

INTERPRET GEOMETRIC TOLERANCING PER:

MATERIAL
—

FINISH
—

DO NOT SCALE DRAWING

AEM ANODYNE ELECTRONICS MANUFACTURING CORP.
KELOWNA BC CANADA
(250)-763-1088
WWW.AEM-CORP.COM

TITLE:

LOUD SPEAKER AMPLIFIER CONNECTOR MAP

SIZE	CAGE CODE	PART No.	REV
A	L9015	LSA800-001	1.00

SCALE: 1:1 | DRAWING No.: 405-0 | SHEET 1 of 2

P201

36 PIN D-MIN SOCKET
MATING CONNECTOR

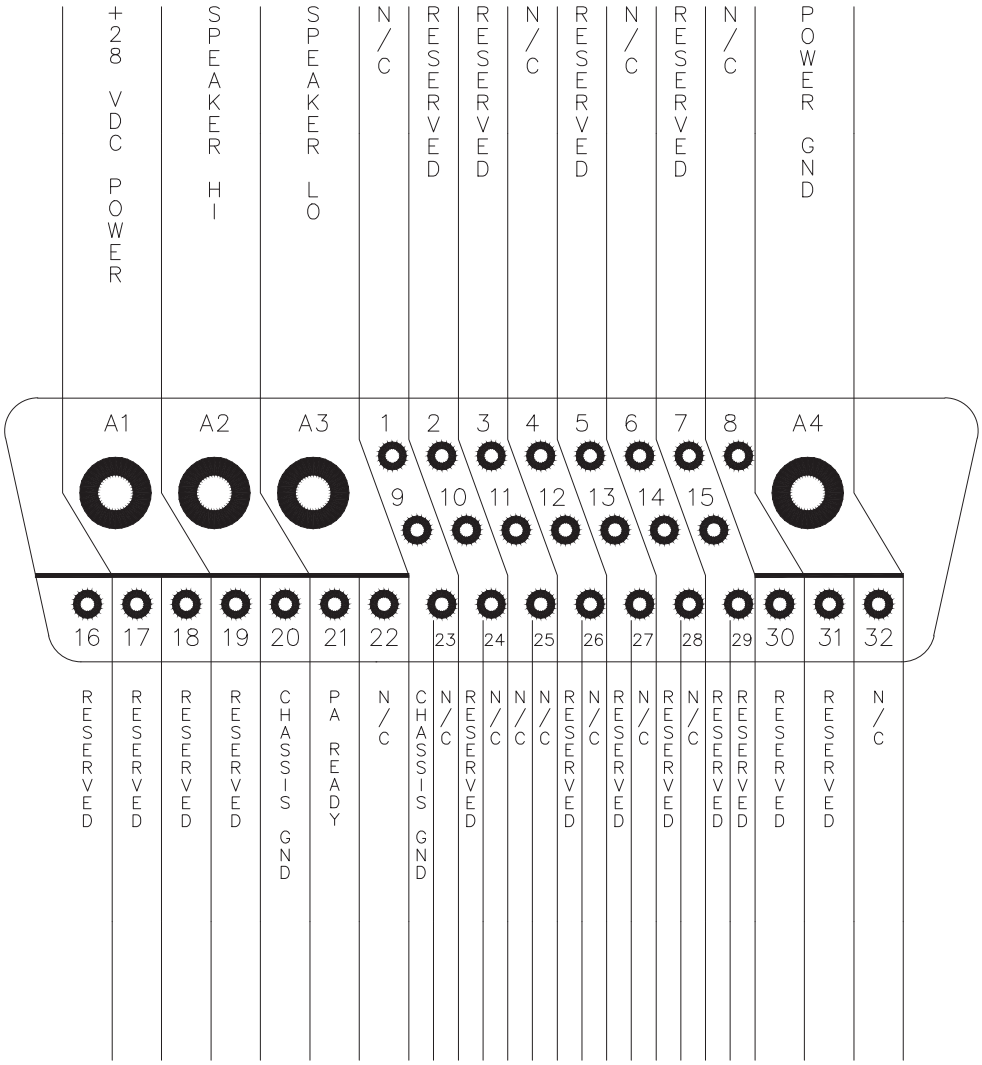

VIEW IS FROM REAR OF AIRFRAME CONNECTOR.

	NAME	DATE
DRAWN	RB	OCT 30/14
CHECKED	AEM	Oct 30/14
APPROVED	AEM	Oct 31/14

PROPRIETARY AND CONFIDENTIAL

THE INFORMATION CONTAINED IN THIS DRAWING IS THE SOLE PROPERTY OF ANODYNE ELECTRONICS MANUFACTURING. ANY REPRODUCTION IN PART OR AS A WHOLE WITHOUT THE WRITTEN PERMISSION OF ANODYNE ELECTRONICS MANUFACTURING IS PROHIBITED.

UNLESS OTHERWISE SPECIFIED:
DIMENSIONS ARE IN INCHES
TOLERANCES:
FRACTIONAL ± 0.5 Deg
ANGULAR: MACH ± BEND ±
TWO PLACE DECIMAL ± 0.01
THREE PLACE DECIMAL ± 0.005

INTERPRET GEOMETRIC TOLERANCING PER:

MATERIAL
—

FINISH
—

DO NOT SCALE DRAWING

ANODYNE ELECTRONICS MANUFACTURING CORP.
KELOWNA BC CANADA
(250)-763-1088
WWW.AEM-CORP.COM

TITLE:

LOUD SPEAKER AMPLIFIER CONNECTOR MAP

SIZE	CAGE CODE	PART No.	REV
A	L9015	LSA800-001	1.00

SCALE: 1:1 | DRAWING No.: 405-1 | SHEET 2 of 2

REVISIONS			
REV.	DESCRIPTION	DATE	NAME
1.10	ECO1036 - COVER AND CHASSIS CHANGES.	10-Dec-14	LAC
1.20	RAS412 - ADDED J101 / J201 LABELS	23-Jan-15	LAC

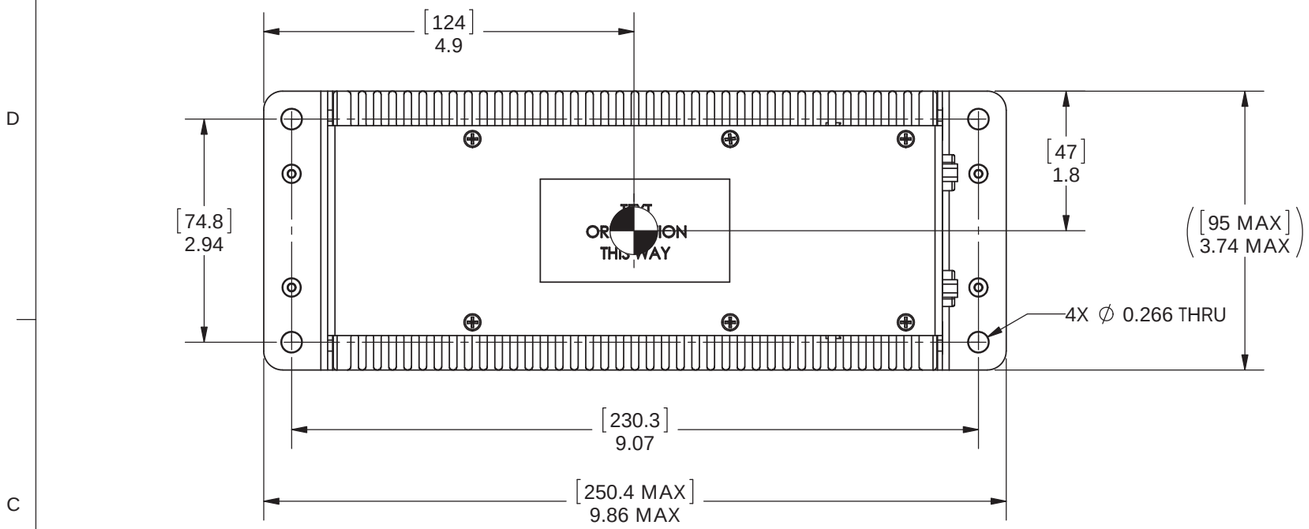

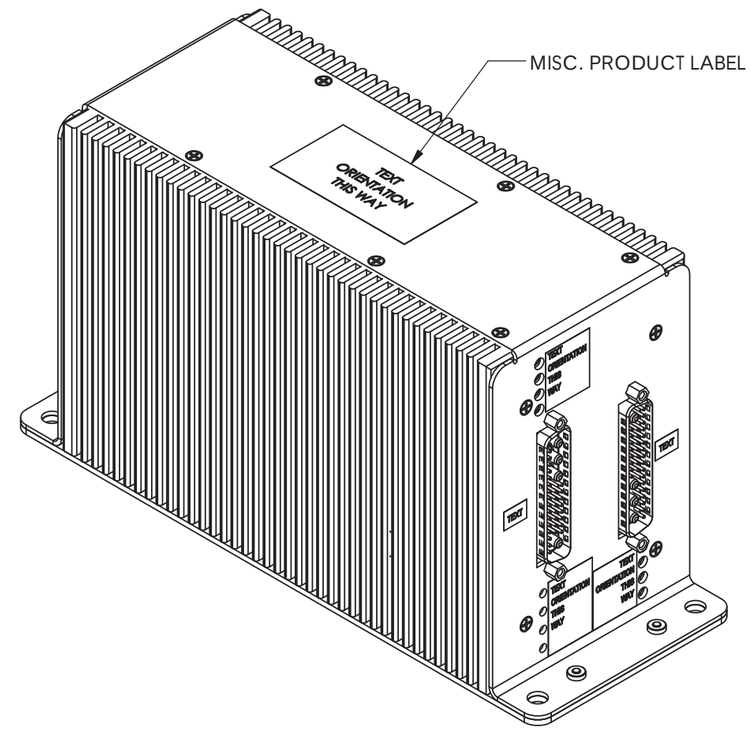

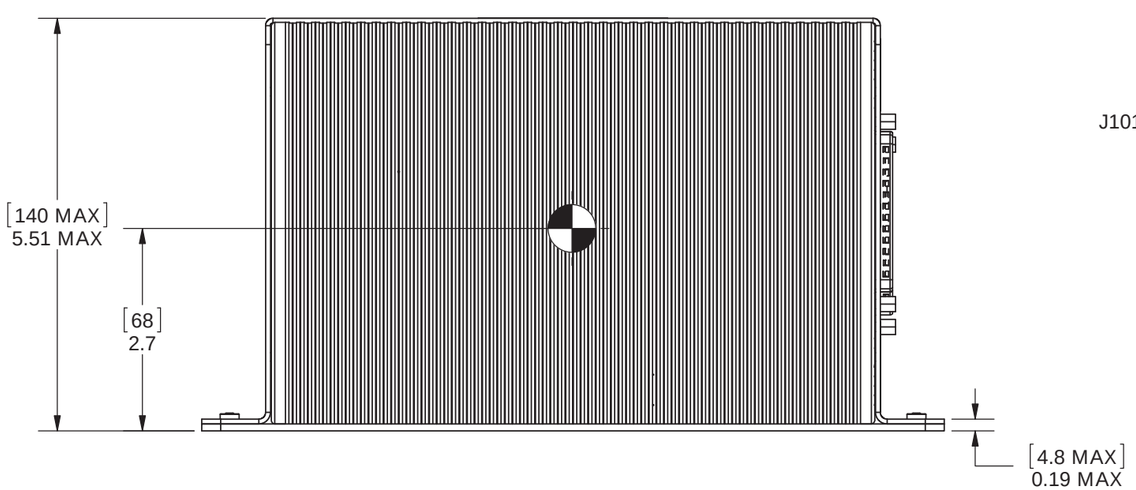

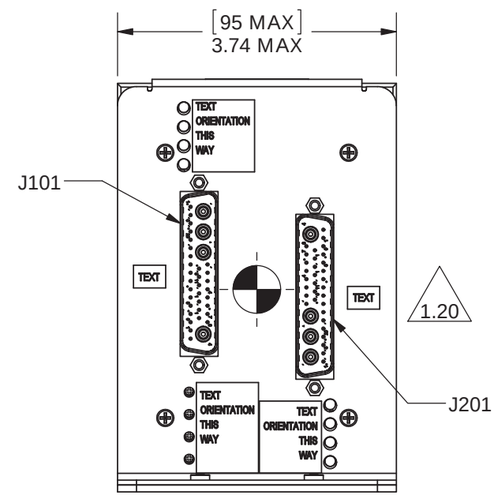

NOTES:

1. MASS 6.3 lbs [2.9 kg] MAX.
2. ⊕ DENOTES CENTER OF MASS (est.)

	NAME	DATE
DRAWN	LAC/DMF	01-Oct-14
CHECKED	AEM JP	23-Jan-15
APPROVED	AEM TB	Jan 26/15

UNLESS OTHERWISE SPECIFIED:
DIMENSIONS ARE IN INCHES[mm]
TOLERANCES:
FRACTIONAL ±0.5 Deg
ONE PLACE DECIMAL ±0.050
TWO PLACE DECIMAL ±0.030
THREE PLACE DECIMAL ±0.010

INTERPRET GEOMETRIC TOLERANCING PER:

MATERIAL N/A

FINISH N/A

DO NOT SCALE DRAWING

CONFIDENTIAL AND PROPRIETARY

THE INFORMATION CONTAINED IN THIS DRAWING IS THE SOLE PROPERTY OF ANODYNE ELECTRONICS MANUFACTURING. ANY REPRODUCTION IN PART OR AS A WHOLE WITHOUT THE WRITTEN PERMISSION OF ANODYNE ELECTRONICS MANUFACTURING IS PROHIBITED.

ANODYNE ELECTRONICS MANUFACTURING CORP.
15-1925 KIRSCHNER RD.
KELOWNA BC V1Y 4N7
(250)-763-1088
WWW.AEM-CORP.COM

TITLE:

LOUD SPEAKER AMPLIFIER MECHANICAL INSTALLATION

SIZE	CAGE CODE	PART No.	REV
B	L9015	LSA800-001	1.20

SCALE: 1:2 | DRAWING No. 922-0 | SHEET 1 OF 1

Section 3.0 Operation

3.1 Introduction

Information in this section consists of functional and operational procedures for the LSA800-001 Loud Speaker Amplifier.

3.2 General

The LSA800-001 Loud Speaker Amplifier has no operator accessible controls. During installation, it may be determined that internal level adjustments are required. Qualified personnel only shall complete internal level adjustments. See Section 2 for adjustments.

3.3 Controls and Indicators

The LSA800-001 has no normal user operational control aspects. However the LSA800-001 does have eight indicators located adjacent to the external D-sub connectors.

3.3.1 Annunciators

The LSA800-001 provides two groups of annunciators, one group for each speaker output. Each group contains three red and one green annunciator, to indicate the following status conditions:

- SHUTDWN Red - Output short circuit and/or extended period of over temp warning*
- OVR TEMP Red - Class D amplifier over temp threshold exceeded**
- OVR VOLT Red - Input over voltage threshold exceeded**
- READY Green - Amplifier is powered and operational

* - The annunciation will not be cleared until the fault condition has been removed or corrected and an external Switched Power reset is performed

** - The annunciations will not be cleared until the fault condition has been removed or corrected.

CONFIDENTIAL AND PROPRIETARY TO ANODYNE ELECTRONICS MANUFACTURING CORP.

3.3.2 Remote ON/OFF

The LSA800-001 is activated and deactivated remotely using one of the two types of Remote On/Off input pins.

The REMOTE ON/OFF 28V IN input pin is activated by applying +28Vdc to the input pin and de-activated by removing +28Vdc.

The REMOTE ON/OFF GND IN input pin is activated by applying a ground to the input pin and de-activated by removing the ground.

End of Section 3.0

CONFIDENTIAL AND PROPRIETARY TO ANODYNE ELECTRONICS MANUFACTURING CORP.